MEM Bath spout without diverter for free-standing assembly - Chrome

MEM

13 672 780 Product version from 9/30/2005

- 280mm projection
- cascade
- total height 830 - 900 mm
- height up to aerator 665 – 735 mm
- push-on rosette 130 x 130 mm
- max. flow 47.8 l/min at 3 bar flow pressure
- WRAS

Chrome	13 672 780-00
Brushed Platinum	13 672 780-06
Platinum	13 672 780-08
Dark Chrome	13 672 780-19
Brushed Durabrass (23kt Gold)	13 672 780-28
Brushed Champagne (22kt Gold)	13 672 780-46
Champagne (22kt Gold)	13 672 780-47

Required miscellaneous

Concealed floor mounting - 35 945 970 90
- max. recess depth mm
- min. recess depth mm

MEM Bath spout without diverter for free-standing assembly - Chrome

13 672 780 Product version from 9/30/2005

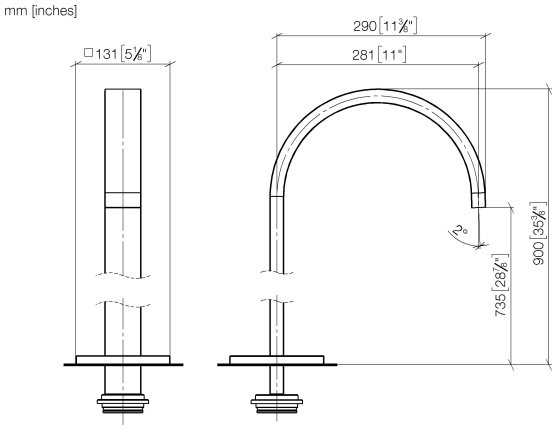

Flow rate chart

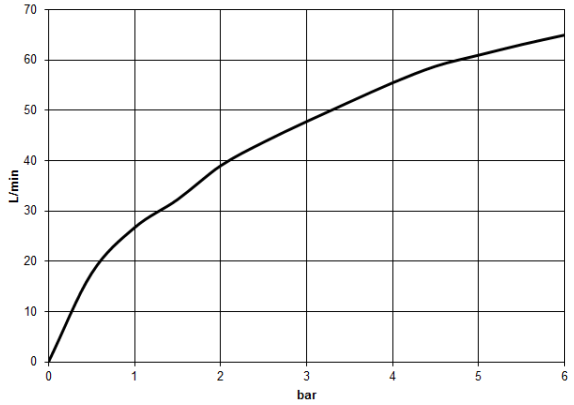

Codes & Standards

ASME A112.18.1	cUPC	DIN 4109	ISO 3822
Scottish Water Byelaws	UK Water Supply Regulations	Ü-Zeichen	

13 672 780 Product version from 9/30/2005

Certificates

IAPMO_4976 WRAS_2005 LGA_18

MEM Bath spout without diverter for free-standing assembly - Chrome

13 672 780 Product version from 9/30/2005

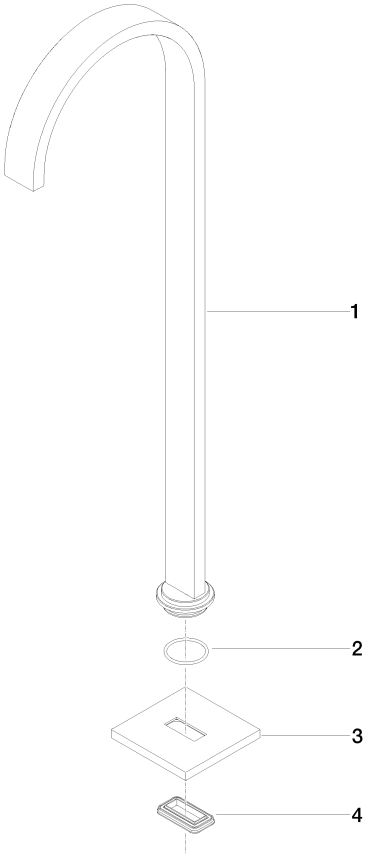

Spare parts list

No.	Item Number	Name	Quantity used	Delivery time
1	04 28 22 183 00-00	spout	1	60
2	09 14 10 084 90	seal	1	2
3	09 27 78 022-00	rosette	1	10
4	09 14 03 106 90	seal	1	2

We reserve the right to change designs, product range and technical specifications without prior notice.
More information can be found at: www.dornbracht.com +49 (0) 2371 8899 900 mail@dornbracht.com